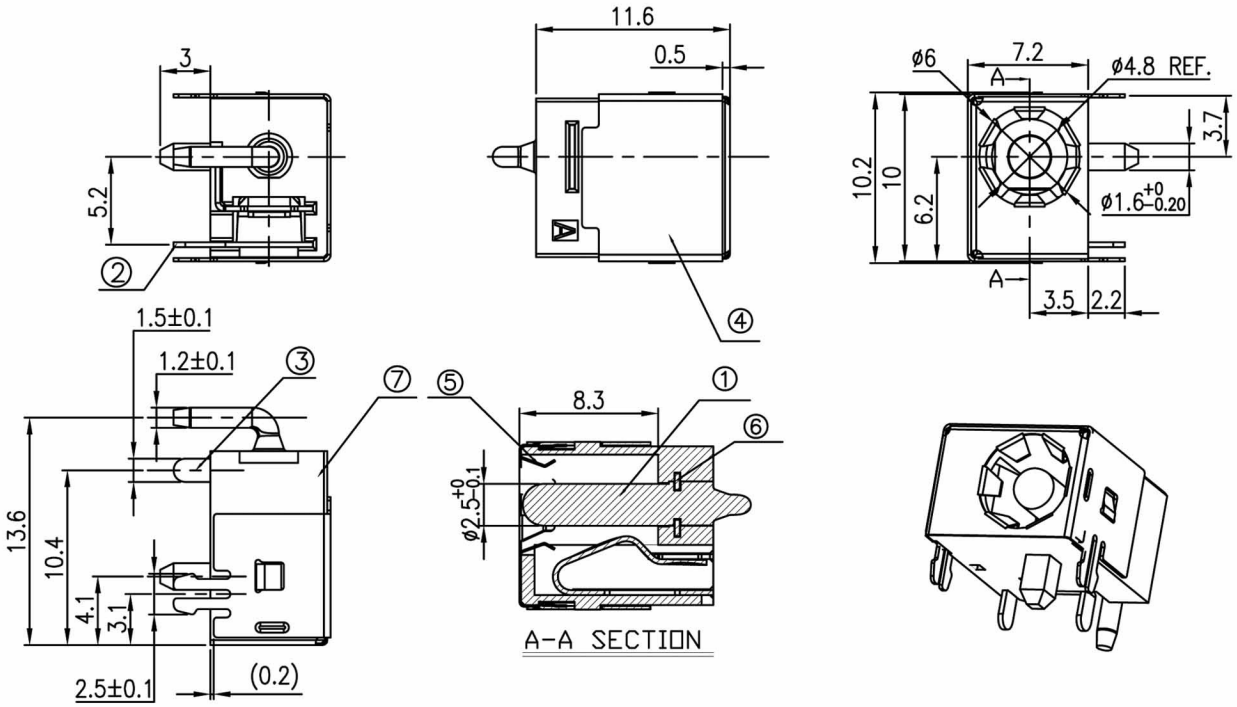

SPECIFICATIONS:

1. ELECTRICAL CHARACTERISTICS:
   1-1. RATING: 20V 4A
   1-2. CONTACT RESISTANCE: 30mΩ MAX.(INITIAL)
   1-3. DIELECTRIC WITHSTANDING VOLTAGE: 500V AC FOR ONE MINUTE
   1-4. INSULATION RESISTANCE: 100MΩ MIN. MEASURED BY 500V DC
2. MECHANICAL CHARACTERISTICS:
   2-1. INSERTION FORCE : 0.3~3.0 KGF
   2-2. WITHDRAWAL FORCE : 0.3~3.0 KGF
3. LIFE TEST: 5,000 CYCLES MIN.
4. FOR REFLOW SOLDERING LEAD-FREE PROCESS.

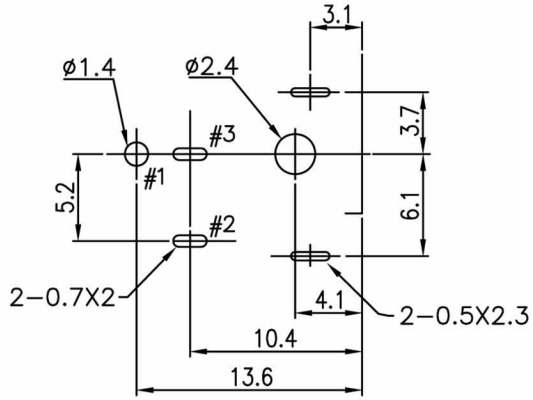

T:1.6 Dimensions of PC board holes
Tolerance : ±0.05(Printed-top view)

LEAD FREE

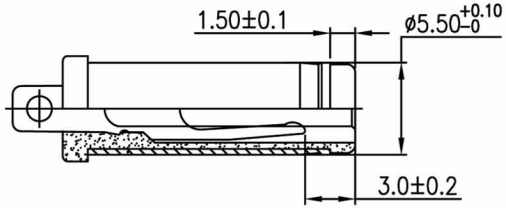

MATE PLUG ø5.5

SCHEMATIC

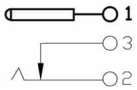

LTR	PART NAME	QTY	MATERIAL	REMARK
7	HOUSING	1	PA9T	UL-94V0(BLACK)
6	TERMINAL	1	SUS301 t=0.30	N/A
5	GROUNDING SPRING	1	SUS301 t=0.10	N/A
4	SHIELDING	1	C2680 t=0.20	MB:Cu Ni PLATED
3	CURVE PIECE	1	C2680 t=0.30	MB:Ni Ag PLATED
2	SPRING PIECE	1	C5191 t=0.30	MB:Ni Ag PLATED
1	PIN	1	H59(COPPER ALLOY)	MB:Ni Ag PLATED

RoHS Compliant

HSM 玄茂科技股份有限公司
HSUAN MAO TECHNOLOGY CO., LTD.

UNLESS OTHERWISE SPECIFIED, TOLERANCE ON DECIMAL: ±0.3

APPD. 核准		TOLERANCE 容許公差 .0 ± .00 ± ANG. ±	PART NAME 品名 DC POWER JACK PINφ2.5mm NORMAL CLOSE TYPE SILVER PLATING BLACK COLOR REEL PACKING ROHS
DWG. 製圖 Hedy	SCALE 比例 參考		
	UNIT 單位 MM	SIZE. 紙張尺寸 A4	PART NO. 料號 C9751-DCVBR000R
DATE 制表日 2013/12/30	PAGE 張數 1 / 1	REV. 版次 B	