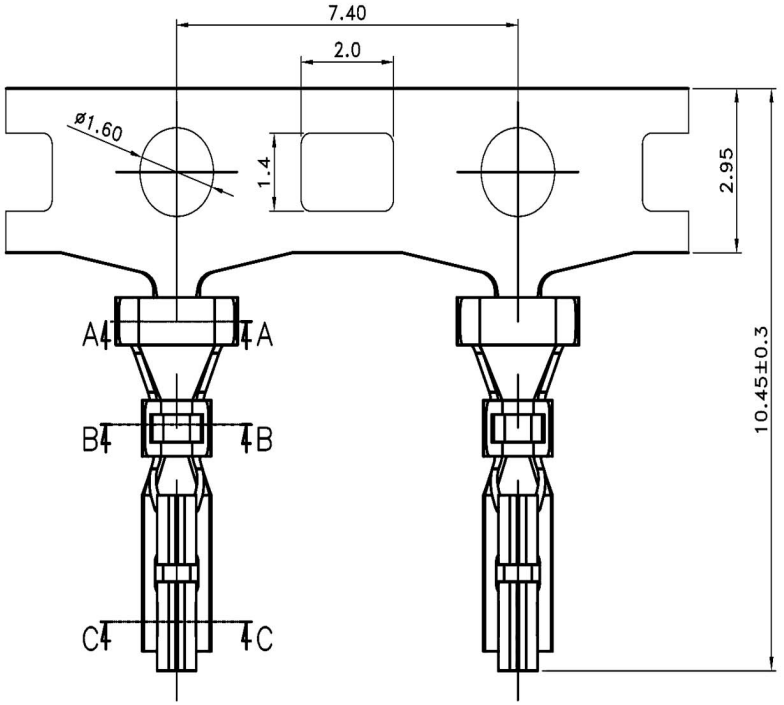

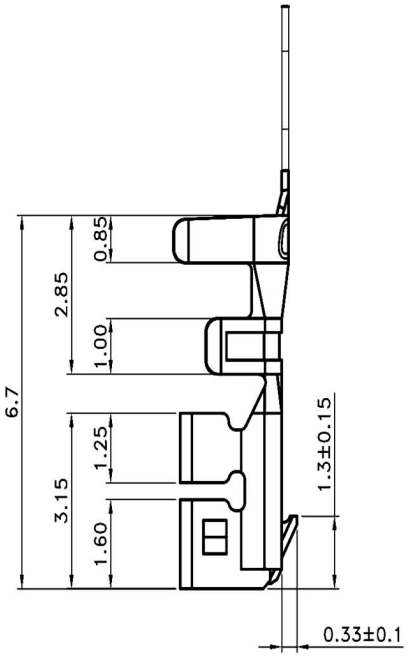

■ **SPECIFICATIONS**

- Current Rating : 22 AWG 3.0A AC/DC
  24 AWG 2.5A AC/DC
  26 AWG 2.5A AC/DC
  28 AWG 2.0A AC/DC
- Withstanding Voltage : 1,000V AC/minute
- Insulation Resistance : 1,000MΩ min.
- Temperature Range : - 25℃ to + 85℃
- Contact Resistance : 20mΩ max.

■ **TERMINAL**

- Thickness : 0.15mm
- Applicable Wire : 22~28 AWG
- Q'ty: 10,000 Pcs/Reel

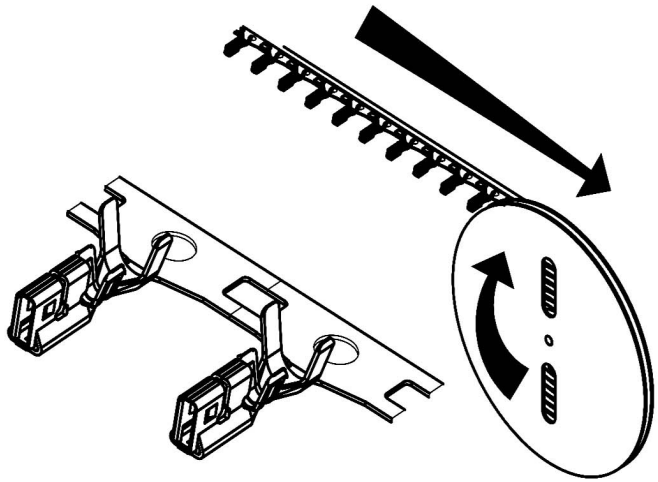

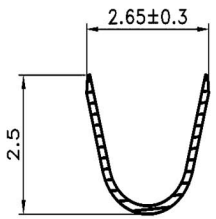

SEC.A–A

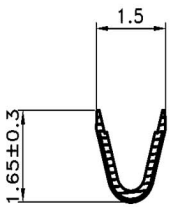

SEC.B–B

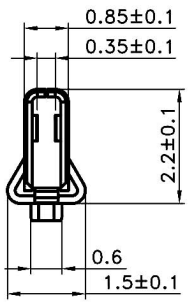

SEC.C–C

RoHS Compliant

HSM 玄茂科技股份有限公司
HSUAN MAO TECHNOLOGY CO., LTD.

APPD. 核准: Betty	SCALE 比例: 參考	TOLERANCE 容許公差: .0 ± 0.30, .00 ± 0.20, ANG. ± 3°	PART NAME 品名: 2.0mm TERMINAL MATERIAL:BRASS TIN PLATED SUITABLE AWG22~28 ROHS
DWG. 製圖: Betty	UNIT 單位: MM	SIZE. 紙張尺寸: A4	PART NO. 料號: T2014-TBJ00000R
DATE 制表日: 2013/10/04	PAGE 張數: 1 OF 1	REV. 版次: A	