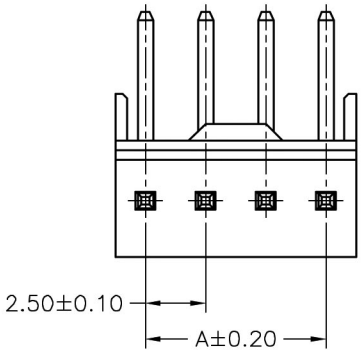

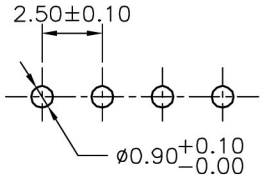

P.C.B LAYOUT

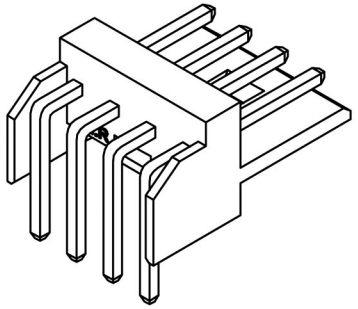

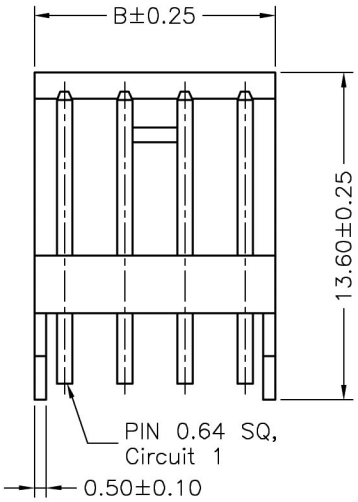

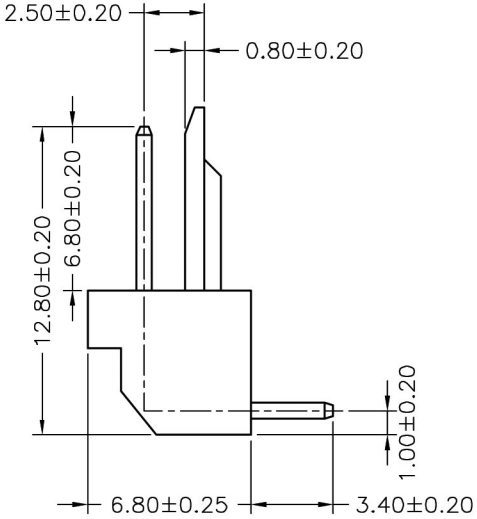

TYPE 1

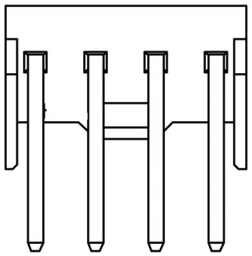

SPECIFICATIONS
Current Rating: 3A AC,DC
Voltage Rating: 250V AC,DC
Temperature Range: −25°C ~ +85°C
Contact Resistance: 10mΩ Max
Insulation Resistance: 500MΩ Min
Withstanding Voltage: 800V AC/minute
Pin Material: Brass/Tin−plated
Material: Nylon 66,UL94V−0
Color: Natural(White)

Ordering Information & Dimensions

PART NO.	Dimensions	
	A	B
02	2.50	5.00
03	5.00	7.50
04	7.50	10.00
05	10.00	12.50
06	12.50	15.00
07	15.00	17.50
08	17.50	20.00
09	20.00	22.50
10	22.50	25.00
11	25.00	27.50
12	27.50	30.00
13	30.00	32.50
14	32.50	35.00
15	35.00	37.50

RoHS Compliant

HSM 玄茂科技股份有限公司
HSUAN MAO TECHNOLOGY CO., LTD.

APPD. 核准		TOLERANCE 容許公差 X.X±0.25 X.XX±0.15 X.XXX±0.05	PART NAME 品名: 2.5mm WAFER XXP RIGHT ANGLE TYPE WITH LOCKING RIB WITH BLOCK TIN PLATING WHITE INSULATOR ROHS
DWG. 製圖	Hedy	SCALE 比例 參考	
DATE 制表日	2017/12/13	UNIT 單位 MM / SIZE. 紙張尺寸 A4	PART NO. 料號 W2490-XXPRTW01R
		PAGE 張數 1 / 1 / REV. 版次 B	