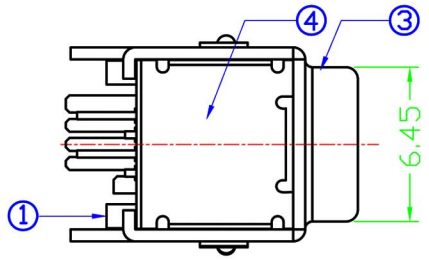

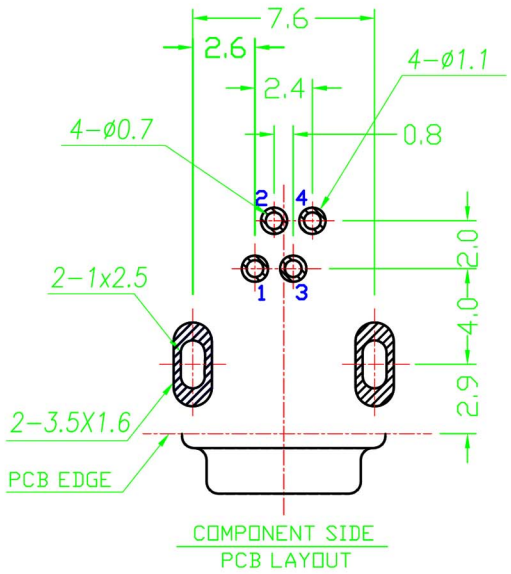

Specification:
Contact Resistance: 50m Ohm Max.
Insulation Resistance: 100M Ohm Min.
Voltage - Max;40V Maximum
Current - Max:1.5A Maximum.
Dielectric Withstanding Voltage:
100V AC for 1 Minute.
Durability (Life Test): 1000 Cycles
Unmating Force:4.9 Newtone TO 39 Newtone Maximum.

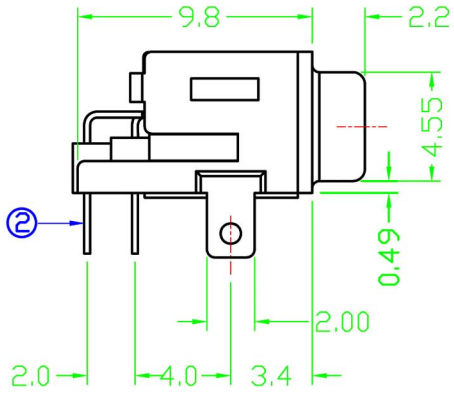

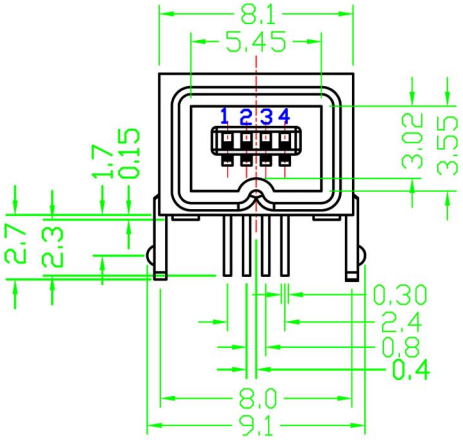

NO.	NAME	MATERIAL	FINISH	REMARK	Q'TY
1	HOUSING	NYLON PA9T G.F	BLACK		1
2	PIN TERM.	PHOS. BRONZE t:0.25mm	GOLD-TIN PLATED	NI:40~60u";TIN:120u", GOLD:30u"	4
3	FRONT SHELL	STEEL t:0.5mm	NICKEL PLATED	NI:80~120u"	1
4	REAR SHELL	PHOS. BRONZE t:0.2mm	NICKEL PLATED	NI:80~120u"	1

RoHS Compliant

HSM 玄茂科技股份有限公司
HSUAN MAO TECHNOLOGY CO., LTD.

APPD. 核准		TOLERANCE 容許公差 X. ±0.38 .X ±0.25 .XX ±0.13 .XXX ±0.05	PART NAME 品名: IEEE 1394 4P FEMALE HORIZONTAL RIGHT ANGLE TWO METAL POSTS SELECTIVE GOLD PLATING BLACK COLOR ROHS LOW-LEAD
DWG. 製圖	Hedy	SCALE 比例 參考	
		UNIT 單位 MM	SIZE. 紙張尺寸 A4
DATE 制表日	2010/12/14	PAGE 張數 1 / 1	REV. 版次 A
			PART NO. 料號 C8318-04FHBSB0R