Features / Specifications:

- Used in H6351 series housing (6 ~ 15 circuits)
- Current rating: 11A
- Voltage rating: 600V
- Ambient temperature range: −55°C ~ 105°C

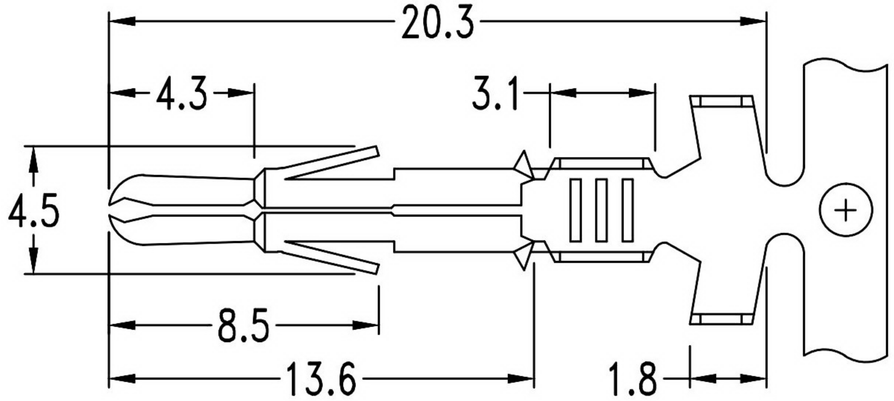

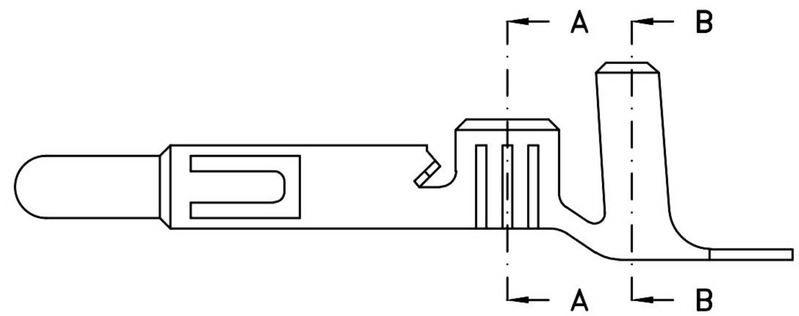

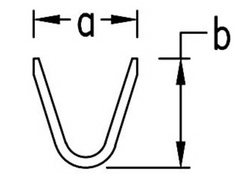

SEC. A-A

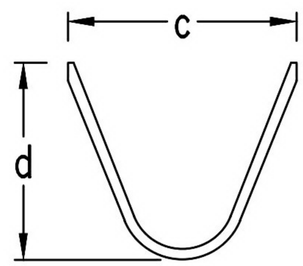

SEC. B-B

Ordering & Dimensional Information (mm)

Part No.	Dimension				Wire range	Material	Thickness	Finish
	a	b	c	d				
T6351-TBD00001R	2.4	2.4	3.4	3.4	#18 ~ #22	Brass	0.3mm	Tin-plated
T6351-SBD00001R	2.4	2.4	3.4	3.4	#18 ~ #22			Contact area: Gold-flash Other: Tin-plated

RoHS Compliant

HSM 玄茂科技股份有限公司
HSUAN MAO TECHNOLOGY CO., LTD.

APPD. 核 准		TOLERANCE 容許公差 .000 ± 0.05 .00 ± 0.15 .0 ± 0.25	PART NAME 品 名: 6.35mm TERMINAL MALE BRASS,(TIN OR SELECTIVE GOLD) PLATED 18~22AWG 5K/ROLL FOR 6P~15P ROHS
DWG. 製 圖	HELEN	SCALE 比 例 参 考	
		UNIT 單 位 MM	SIZE. 紙張尺寸 A4
DATE 制表日	2018/8/28	PAGE 張 數 1 OF 1	REV. 版 次 A
			PART NO. 料 號 T6351-XBD00001R